FEDERAL CUSTOM CABLE

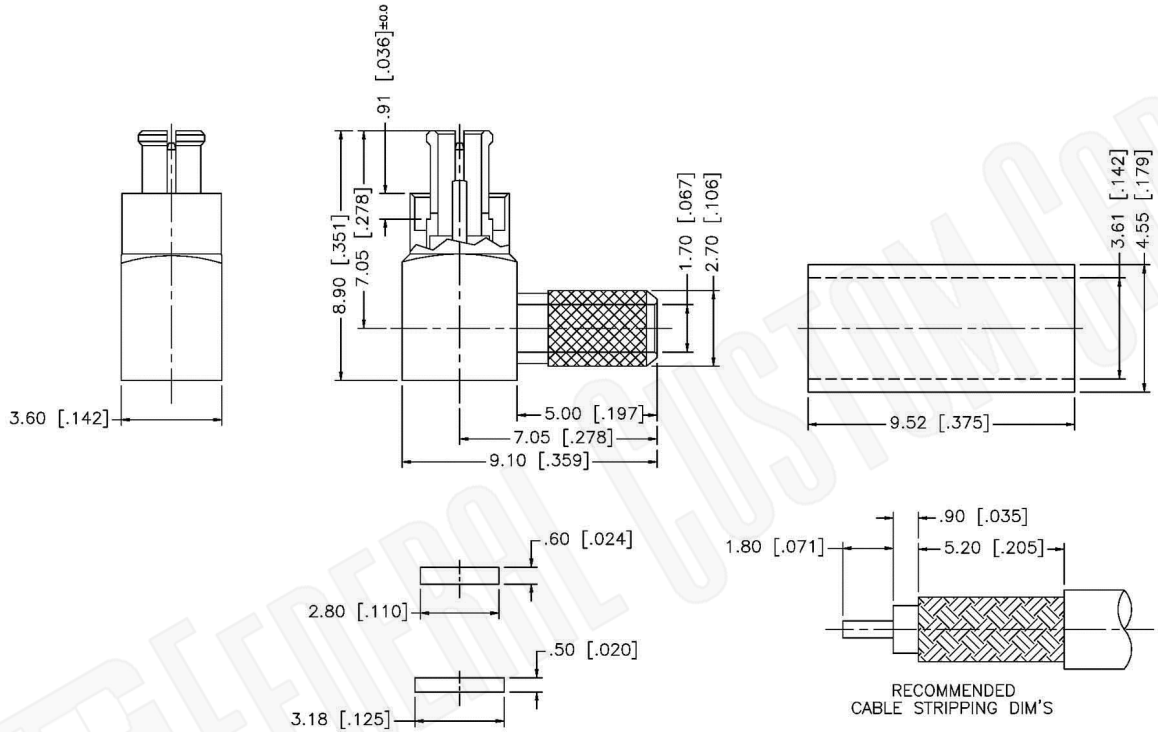

NOTE:
1. CRIMPED FERRULE HEX CRIMP SIZE .151"
2. CONTACT PIN TO SOLDER

Material Specifications

Cable(s):	RG188DS-RG316DS
Body:	Brass
Finish:	Nickel
Insulation:	Teflon
Impedence:	50 Ohms

LEAD FREE RoHS COMPLIANT

Federal Custom Cable
www.FCCable.com
1891 Alton Parkway, Irvine, CA 92606
Phone: (949) 851-3114 I Fax: (949) 852-8136
Sales@FCCable.com

CAGE CODE 1UKX3	**Part Number:**	**Description:**	
Dimensions Millimeters I Inches	**C1574**	**MC-CARD PLUG CONNECTOR RIGHT ANGLE CRIMP FOR RG188DS, RG316DS CABLES**	
Scale: N/A	**NOTES:** 1. DIMENSIONS ARE IN MILLIMETERS I INCHES 2. UNLESS OTHERWISE SPECIFIED ALL DIMENSIONS ARE NOMINAL 3. SPECIFICATIONS ARE SUBJECT TO CHANGE WITHOUT NOTICE		
Revision:			

THIS DRAWING CONTAINS PROPRIETARY INFORMATION THAT BELONGS TO FEDERAL CUSTOM CABLE, LLC. ANY UNAUTHORIZED USE OF THIS DRAWING IS PROHIBITED WITHOUT WTITTEN PERMISSION FROM FEDERAL CUSTOM CABLE.
ALL RIGHTS RESERVED.©2016 COPYRIGHT FEDERAL CUSTOM CABLE, LLC.