FEDERAL CUSTOM CABLE

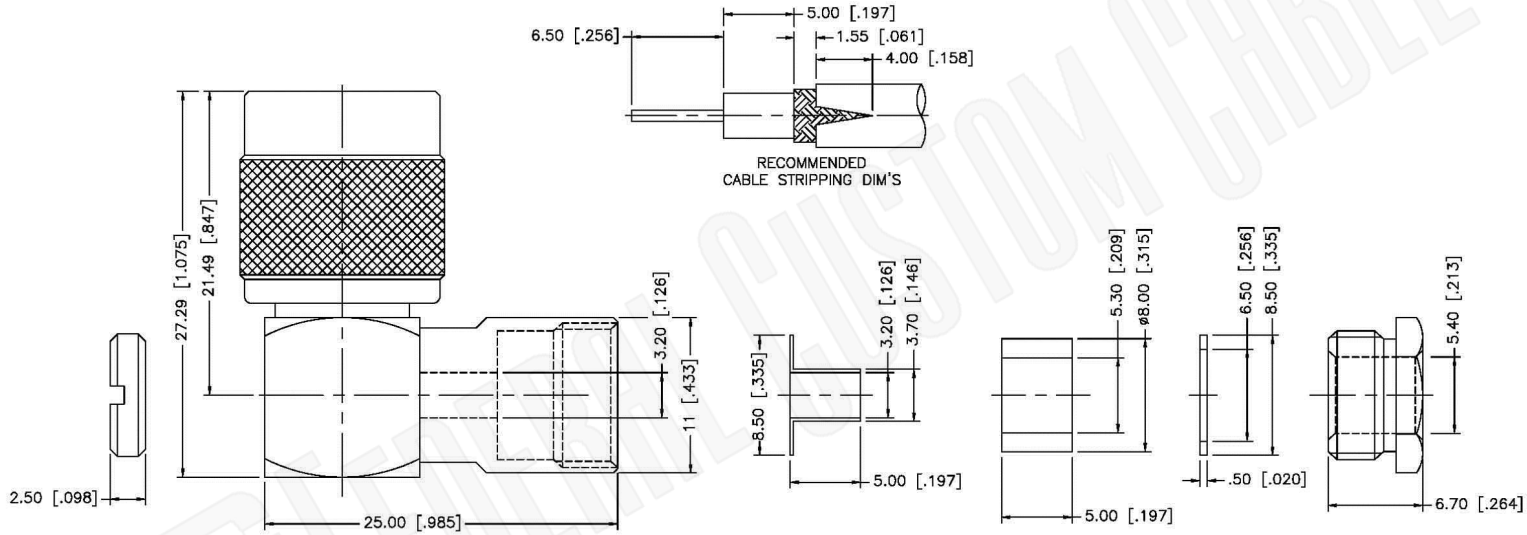

Material Specifications

Cable(s):	RG58,58A,58C,141,303,LMR195,B7806A
Body:	Brass
Finish:	Nickel
Insulation:	Teflon
Impedence:	50 Ohms

LEAD FREE RoHS COMPLIANT

Federal Custom Cable
www.FCCable.com

1891 Alton Parkway, Irvine, CA 92606
Phone: (949) 851-3114 I Fax: (949) 852-8136
Sales@FCCable.com

CAGE CODE
1UKX3

Dimensions
Millimeters I Inches

Scale: N/A

Revision:

Part Number:

C2147

Description:

TNC MALE CONNECTOR RIGHT ANGLE CLAMP FOR RG55, RG58, RG142, RG223, RG400, LMR195 CABLES

NOTES:
1. DIMENSIONS ARE IN MILLIMETERS I INCHES
2. UNLESS OTHERWISE SPECIFIED ALL DIMENSIONS ARE NOMINAL
3. SPECIFICATIONS ARE SUBJECT TO CHANGE WITHOUT NOTICE

THIS DRAWING CONTAINS PROPRIETARY INFORMATION THAT BELONGS TO FEDERAL CUSTOM CABLE, LLC. ANY UNAUTHORIZED USE OF THIS DRAWING IS PROHIBITED WITHOUT WTITTEN PERMISSION FROM FEDERAL CUSTOM CABLE.
ALL RIGHTS RESERVED.©2016 COPYRIGHT FEDERAL CUSTOM CABLE, LLC.